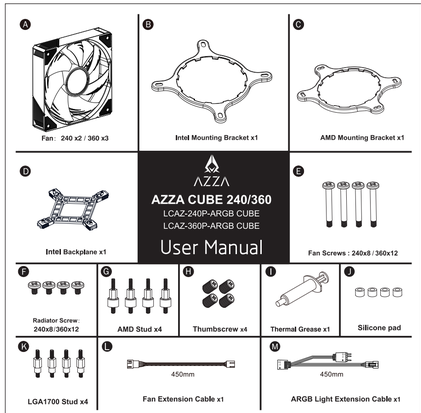


## 1 Intel

1851
1700
1200
115X
1366

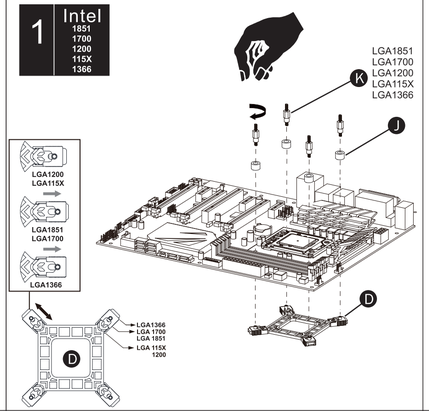


## 1 AMD

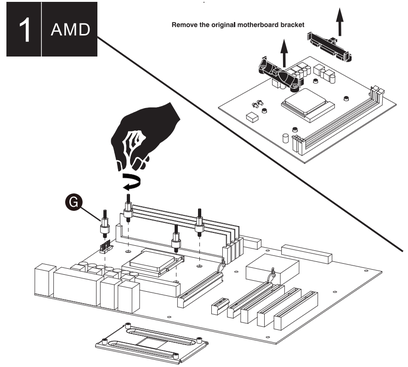


## 4 Intel / AMD

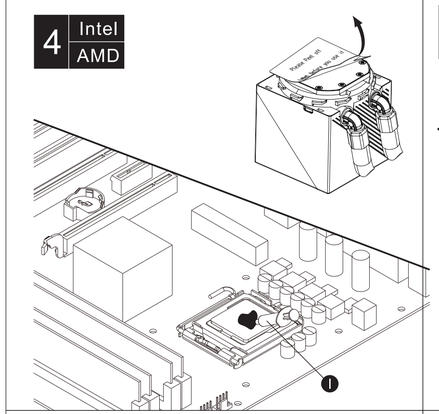


## 5 Intel / AMD

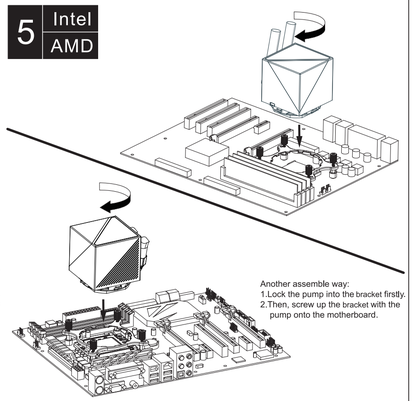


## 6 Intel / AMD

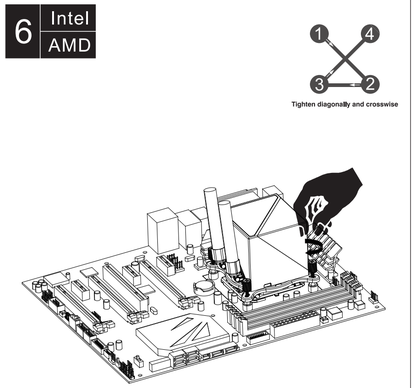


## 2 Intel

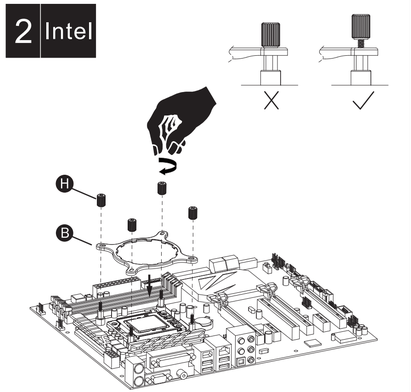


## 2 AMD

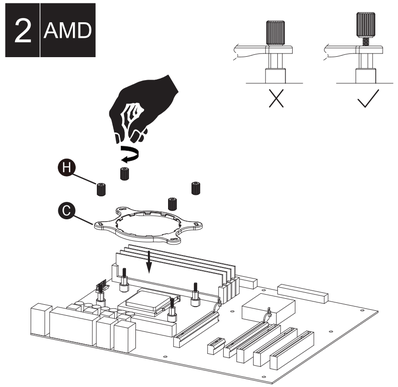


## 3 Intel / AMD

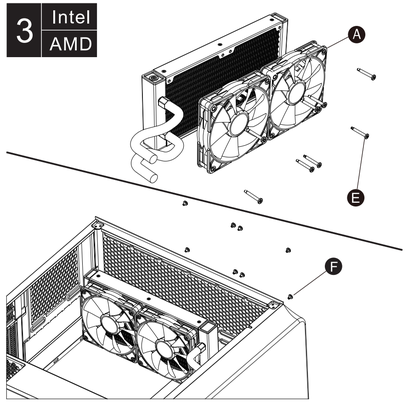


## 7 Intel / AMD

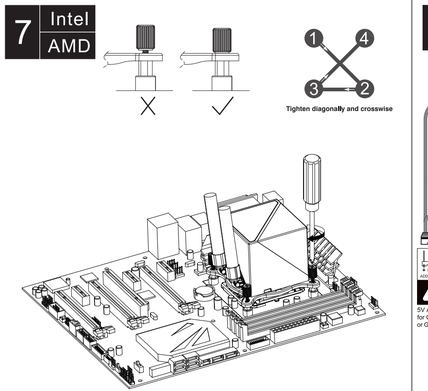


## 8 Intel / AMD ARGB Motherboard Connection

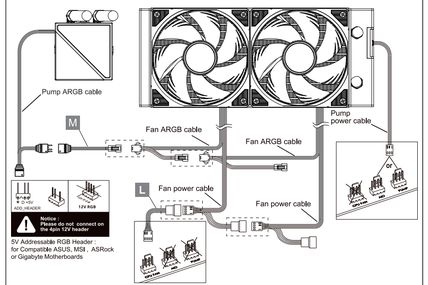


## MEMO